CEN/TC 223/WG 4 "Analytical methods"
WG Secretariat: **ASI**
Convenor: **Baumgarten Andreas Mr**

1st WD_WI 00223100_EN 13040-1_2022-02

Document type	Related content	Document date	Expected action
Project / Draft		2022-03-01	**INFO**

Description

Please find enclosed the 1st working draft of WI 00223100, Soil improvers and growing media — Sample preparation — Part 1: Sample preparation for chemical and physical tests, determination of dry matter content, moisture content and laboratory bulk density (EN 13040rev) for your information.

As agreed during the last meeting of WG 4 on 2022-02-09, the enclosed 1st working draft and the forms for the activation of the work item will be circulated to CEN/TC 223 as soon as the call for tender for the project leaders is completed and the project leaders are known.

CEN/TC 223

Date: 2022-02

prEN 13040-1:2022

Secretariat: NEN

Soil improvers and growing media — Sample preparation — Part 1: Sample preparation for chemical and physical tests, determination of dry matter content, moisture content and laboratory bulk density

ICS:

CCMC will prepare and attach the official title page.

Contents

Page

European foreword 4
1 Scope 5
2 Normative references 5
3 Terms and definitions 5
4 Principle 6
5 Sampling 6
6 Sample reception 6
7 Transportation and storage of samples 6
8 Classification of samples as a function of matrix 7
9 Preparation of the un-dried laboratory sample 7
9.1 Apparatus 7
9.2 Test sample in solid form 7
9.2.1 Sample preparation (unsieved test sample) 7
9.2.2 Determination of material exceeding 40 mm 8
9.2.3 Test sample passing through a 40 mm square aperture sieve 8
9.2.4 Test sample passing through a 25 mm square aperture sieve 8
9.2.5 Test sample passing through a 20 mm square aperture sieve 8
9.3 Test sample in shear resistant pasty form 8
9.4 Test sample in liquid and aqueous pasty form 9
9.5 Test sample in pre-shaped form 9
9.5.1 Sample preparation for bulk density determination 9
9.5.2 Sample preparation for dry matter content determination 9
9.5.3 Sample preparation for chemical analyses 9
10 Preparation of the dried ground (or otherwise size reduced) test sample 9
10.1 Apparatus 9
10.2 Procedure 9
11 Determination of dry matter content 10
11.1 Apparatus 10
11.2 Procedure 11
11.2.1 Solid and shear resistant pasty materials 11
11.2.2 Liquid and aqueous pasty materials 11
11.2.3 Pre-shaped materials 11
11.3 Calculation 11
11.3.1 Dry matter content 11
11.3.2 Moisture content 11
11.3.3 Precision - Moisture content 12
12 Test report 12
Annex A (normative) Determination of laboratory bulk density 13
A.1 General 13
A.2 Laboratory compacted bulk density of solid and shear resistant pasty samples 13
A.2.1 Principle 13

A.2.2 Apparatus 13
A.2.3 Procedure 15
A.3 Laboratory bulk density of liquid and aqueous pasty samples 16
A.4 Laboratory bulk density of pre-shaped growing media 17
A.5 Expression of results for solid, share resistant pasty, liquid and aqueous pasty samples 17
A.6 Precision - laboratory bulk density 17
A.7 Use and storage of material 17
A.8 Test report 17

Annex B (informative) Results of an interlaboratory trial to determine moisture content and laboratory bulk density 19

Bibliography 20

European foreword

This document (prEN 13040-1:2022) has been prepared by Technical Committee CEN/TC 223 “Soil improvers and growing media”, the secretariat of which is held by NEN.

This document is a working document.

This document will supersede EN 13040:2007.

In comparison with the previous edition, the following technical modifications have been made:

- The title has been changed;
- Clause 7 (Transportation and storage of samples) has been completed;
- Clause 8 (Classification of samples as function of matrix) has been introduced;
- In Clause 9 (Preparation of the un-dried laboratory sample) a new type of test samples has been added;
- Clause 10 (Preparation of the dried ground (or otherwise size reduced) test samples), has been updated;
- In Clause 11 (Determination of dry matter content) a new type of test samples has been added;
- Annex A has been completed considering different procedures to determine laboratory bulk density depending on the classification of samples as function of matrix (Clause 8);
- Formula A.1 and A.2 have been modified.

This document has been prepared under a standardisation request given to CEN by the European Commission and the European Free Trade Association.

1 Scope

This European Standard specifies a routine method for preparing a sample of organic soil improver, inorganic soil improver, growing medium, compost or digestate prior to chemical analysis and physical testing. The procedures described herein apply only to those samples that are supplied to a laboratory in the form in which they will be used for their intended purpose and to samples with a manufacturer's guidance for reconstitution. This method is not applicable to small mineral and organic preshaped materials (e.g. plugs).

NOTE 1 The determination of the laboratory bulk density is given in Annex A.

NOTE 2 The results of an interlaboratory trial to determine moisture content are given in Annex B.

NOTE 3 The results of an interlaboratory trial to determine laboratory bulk density are given in Annex B.

2 Normative references

The following documents are referred to in the text in such a way that some or all of their content constitutes requirements of this document. For dated references, only the edition cited applies. For undated references, the latest edition of the referenced document (including any amendments) applies.

EN 12579:—[1], *Soil improvers and growing media – Sampling*

EN 15761:—[2], *Pre-shaped growing media – Determination of the dimensions measured and bulk density*

ISO 565, *Test sieves – Metal wire cloth, perforated metal plate and electroformed sheet – Nominal sizes of openings*

3 Terms and definitions

For the purposes of this standard, the terms and definitions in EN 12579:—, CEN/TS 00223137:—[3] and the following apply.

3.1

test sample

sample prepared from the laboratory sample and from which test portions will be taken

3.2

test portion

quantity of material drawn from the test sample (or from the laboratory sample if both are the same) and on which the tests or observations are actually carried out

3.3

laboratory compacted bulk density

density, expressed in grams per litre of the material as determined in the laboratory using a cylinder of known volume; the sample being compacted under defined conditions

[1] Under preparation. Stage at the time of publication: prEN 12579:20**.

[2] Under preparation. Stage at the time of publication: prEN 15761:20**.

[3] Under preparation. Stage at the time of publication: prCEN/TS 00223137:20**.

4 Principle

The laboratory sample is coded and sub-divided to prepare the test sample in such a manner as to be representative of the sample as submitted to the laboratory. The sample's intrinsic structure shall be maintained whenever possible.

5 Sampling

The laboratory sample shall be obtained in accordance with EN 12579:—.

6 Sample reception

Upon receipt of the laboratory sample, the laboratory shall confirm that the sample relates to the accompanying documentation. The sampler shall submit with the sample, at least the following minimum requirements:

a) name of the client;

b) to whom the results shall be reported if different from a) above;

c) place and date the sample was taken;

d) name of the sampler;

e) discrete sample identification;

f) analysis required.

The laboratory shall confirm that a sufficient sample has been provided for the analyses to be undertaken by recording the date the sample was received and giving the sample a unique laboratory identification code. This code shall be recorded on all subsequent sub sample containers and on the documentation supplied with the sample.

7 Transportation and storage of samples

The laboratory sample shall be transported and stored without compaction or any other treatment which may irreversibly alter its moisture content, particle size, packing characteristics or any feature which affects density.

A sample, as submitted to the laboratory shall be stored so that it shall not undergo any further decomposition, physical damage, hydration or dehydration. Recommended storage should be at 3 °C ± 2 °C, in a closed polyethylene bag so that the sample fills volume of the container completely. The storage period depends on several factors including what is the normal custom in the analysing laboratory or country. Analysis of fresh materials shall be undertaken within 2 weeks of receipt of the sample. When transport takes place, the sampling plan shall consider:

a) the time between sampling and start of transport;

b) transport time;

c) starting time of analysis in the laboratory.

This sum of these 3 periods is limited to the maximum storage times.

It is recommended that all such samples should be stored for a minimum of 28 days from the date of reporting the results to the client.

8 Classification of samples as a function of matrix

The sample pre-treatment must be differentiated accordingly to the physical state. The following 4 matrix types are distinguished for performing the sample pre-treatment:

1) Solid samples: these samples have an estimated dry matter content of at least 30 % m/m.

   NOTE 1 Examples are compost, dried digestate, peat, coir, wood fiber.

2) Shear resistant pasty samples: these samples have an estimated dry matter content between 15 % and 30 % m/m.

   NOTE 2 Examples are sludge, thick fraction of digestate.

3) Liquid and aqueous pasty samples: these samples have an estimated dry matter content of less than 15 % m/m.

   NOTE 3 Examples are sludge, crude digestate, thin fraction of digestate.

4) Pre-shaped samples.

   NOTE 4 Examples are mineral wool and polyurethane products (slabs, blocks,).

The classification of the delivered laboratory sample in the relevant matrix type and the associated sample pre-treatment can be performed on the basis of visual assessment in combination with the estimated dry matter content. However, the physical state based on the visual observation is decisive for performing the sample pre-treatment.

9 Preparation of the un-dried laboratory sample

9.1 Apparatus

9.1.1 Sieves 20 mm, 25 mm and 40 mm square aperture size.

9.1.2 Analytical balance with a scale interval of 0,1 g and a capacity of weighing 6000 g.

9.1.3 Laboratory blender.

9.1.4 Sharp knife or a saw.

Depending on the physical state of material, the following procedures apply:

9.2 Test sample in solid form

9.2.1 Sample preparation (unsieved test sample)

Thoroughly mix the laboratory sample, gently breaking any lump or agglomerate of the sample that has been caused, by, for example, compression during transportation. Some samples (e.g., compressed coir brick) must be reconstituted before the previous step following manufacturer's guidance if the procedure has not been performed during sampling.

NOTE Care should be taken to avoid breaking intrinsic parts and to avoid a loss of moisture.

If necessary, divide the sample to form sub-samples. Recognized procedures such as coning and quartering shall be used for sub-sampling. The size of the final test sample shall be large enough to truly represent the laboratory sample and to provide sufficient uniform material for all defined physical and

chemical tests that are required to be carried out. It is unlikely that a laboratory sample of less than 10 l shall be sufficient for all physical and chemical analyses.

During preparation the sample shall not be cut or ground.

9.2.2 Determination of material exceeding 40 mm

Weigh approximately 1000 ml of the unsieved test sample (ma) and pass it through a 40 mm square aperture sieve and agitate gently if required.

Record the weight (mb) of the amount of sample that does not pass the sieve and express this figure (c) as a fraction of the total sub-sample mass. This figure is to be reported.

$$c = \frac{m_{\mathrm{b}}}{m_{\mathrm{a}}} \tag{1}$$

where

m_a is the mass in grams of the sub-sample;

m_b is the mass in grams of material retained on a 40 mm square aperture sieve;

c is the fraction retained on a 40 mm square aperture sieve.

9.2.3 Test sample passing through a 40 mm square aperture sieve

Take approximately 5 l of the unsieved sample (9.2.1) and pass through a 40 mm sieve. When 20 % m/m or less of the sample has been retained on the 40 mm sieve, the retained particles shall be physically reduced in equal parts as few times as necessary to permit the entire sample to pass through the sieve.

Thoroughly mix the whole sub-sample with the broken particles that have been retained on the sieve taking care to minimize physical damage to the sample as a whole.

9.2.4 Test sample passing through a 25 mm square aperture sieve

Take approximately 5 l of the unsieved sample (9.2.1) and pass through a 25 mm sieve. Any particle of the sample > 25 mm and/or flexible fibres > 80 mm shall be physically reduced in equal parts and as few times as are necessary to be ≤ 25 mm and ≤ 80 mm for flexible fibres.

Thoroughly mix the whole sub-sample with the broken particles that have been retained on the sieve taking care to minimize physical damage to the sample as a whole.

NOTE This test sample is suitable for physical methods of analyses (see EN 13041 [8]).

9.2.5 Test sample passing through a 20 mm square aperture sieve

Take about 5 l of the unsieved sample (9.2.1) and using a scoop, pass the material through a 20 mm screen and agitate gently if required. If more than 10 % m/m is retained on the screen then the procedure shall be inappropriate to the material under test. If less than 10 % is retained, this material shall be broken down in equal parts and as few times as necessary to permit the entire sample to pass through the sieve.

9.3 Test sample in shear resistant pasty form

Shear resistant pasty laboratory samples are homogenized by manual conversion. If the pasty samples contain coarser parts, the sample must be homogenized by mechanical mixing.

Mechanical homogenization is not allowed if the parameters "Stones and impurities" have to be determined.

9.4 Test sample in liquid and aqueous pasty form

Liquid and aqueous pasty samples containing less than 15 % of dry matter are often heterogeneous and can consist of, e.g., a sludge layer and a liquid layer. These samples shall, after shaking and stirring with a spatula, be homogenized with a robust blender. Ensure that any solid sludge layer on the bottom is loosened and well mixed. Place the sample bottle under the blender, with the rotor knife approximately 3 cm from the bottom of the sample bottle. Homogenize the sample with the greatest possible rotational speed, while avoiding excessive foaming. The blender can be moved vertically back and forth during homogenization to optimize homogenization. After homogenization, the sample bottle is closed. After mixing, immediately take sub-samples and/or test samples for the analyses to be performed. If, after storage of the homogenized samples, additional sub-sample/analysis portions have to be taken, the sample must be re-homogenized with a blender.

The use of a blender is not allowed for the determination of OUR and residual gas production. Mechanical homogenization is not allowed if the parameters "Stones and impurities" have to be determined.

9.5 Test sample in pre-shaped form

9.5.1 Sample preparation for bulk density determination

Remove the wrap or cover and proceed according to EN 15761:—.

9.5.2 Sample preparation for dry matter content determination

Test the material without grinding or milling.

Slabs and blocks: remove the wrap or cover and, using a sharp knife or a saw, make pieces of approx. 60 ml. When cut from a standard slab of 7,5 cm height that would mean a piece with a length of 4,0 cm and a width of approx. 2,0 cm. Obtain a final volume of e.g., 2 l from different specimen.

9.5.3 Sample preparation for chemical analyses

Slabs and blocks: take about 1 l of 9.5.2 and make pieces of approx. 30 ml, with a maximum width and length of 2 cm. For a standard slab of 7,5 cm height, it means to reduce the length from 4 cm to 2 cm.

10 Preparation of the dried ground (or otherwise size reduced) test sample

10.1 Apparatus

10.1.1 Grinding apparatus, able to grind the whole sub-sample without contamination, e.g., cutting mill, ultracentrifuge mill, pestle and mortar.

10.1.2 Sieves, 2 mm and 0,5 mm square aperture size.

10.1.3 Ventilated oven, capable of maintaining a temperature of 70 °C ± 5 °C or other means of sample drying.

10.2 Procedure

Dry a portion of the test sample (9.2.1, 9.3, 9.4, 9.5.2) until it crumbles to the touch for solid and share resistant, pasty materials. The pre-shaped materials most often do not alter in shape. Use one of the following methods:

a) at 70 °C ± 5 °C in a ventilated oven; or

b) where it is necessary to prevent losses by conventional oven drying methods, freeze drying or milling in the presence of dry ice; or

c) where volatilisation of ammonia is expected and sample pre-treatment is required (e.g. total N according to EN 13654-2). Place about 250 g of the solid or pasty sample in a drying tray and weigh to the nearest 0.1 g (m_1). Using a dosing device, add 300 ml tartaric acid solution (c ($C_4H_6O_6$) = 0,445 mol/l. Dissolve 667 g tartaric acid in ± 8 l water and make up to 10 l with water). Using the spoon, mix the added amount of tartaric acid solution through the sample to a homogeneous suspension. Any lumps present should be crushed with a spoon. Dry in the oven at 70 °C ± 5 °C until constant weight. During drying, scoop the sample with the spoon and turn it over. Weigh the tray with contents (m_2), to the nearest 0,1 g. Grind the dried sample and reduce to < 0,5 mm.

For further determinations performed on this sample, the drying factor, in which the contribution of the tartaric acid is taken into account, must be included in the final calculations to refer the result to fresh sample.

Calculate the drying factor using the following equation:

$$df = \frac{m_2 - m_0}{m_1 - m_0} \tag{2}$$

df	drying factor
m_0	is the mass in grams of the empty tray
m_1	is the mass in grams of the wet sample plus tray
m_2	is the mass in grams of the dried sample plus tray

NOTE To prevent losses of mercury, dry the sample at a temperature < 40 °C.

The drying method shall be recorded with the results when a technique like the type presented in b) and in c) are used.

The particle size shall be reduced so that the dried sample is able to pass through the 2 mm mesh sieve and for specific determinations (e.g. Digestion of aqua regia soluble elements, EN 13650:—), through the 0,5 mm mesh sieve (10.1.2). It may be necessary to chop, cut or otherwise reduce large particles prior to milling. For samples that can be milled, ensure that during grinding no heat is generated and no inadvertent sub-sampling occurs, in that some particle sizes are excluded from the milling process either as dust or as excessively hard particles. For samples that cannot be milled, e.g. expanded foam, other means for reducing the particulate size such as knives or scissors may be used.

11 Determination of dry matter content

11.1 Apparatus

11.1.1 Sample tray, capable of holding no less than 100 ml of the sample or a block of 7,5 cm width and length of pre-formed material and constructed of material thermally stable up to 150 °C.

11.1.2 Drying oven, ventilated, fan assisted, capable of holding sample trays (11.1.1) and maintaining 105 °C ± 2 °C.

11.1.3 Analytical balance, with a scale interval of 0,01 g and a capacity of weighing 500 g.

11.1.4 Hot plate.

11.2 Procedure

11.2.1 Solid and shear resistant pasty materials

Weigh the dry tray to get (m_T). Transfer approximately 50 g or 100 ml for materials with low bulk density (e.g. wood fibre) of the mixed prepared sample - in the tray (10.1.1), spread to an even depth not exceeding 2 cm and without delay weigh to an accuracy of 0,01 g (m_W). Place the tray in the oven (10.1.2) and dry at 105 °C ± 2 °C. After cooling in the desiccator weigh the evaporating tray for the first time. The dry residue shall be regarded as constant if the mass obtained after further 1 h of drying does not differ by more than 0,5 % or 2 mg of the previous value, whichever is the greater (m_D). If the difference is greater, repeat the drying process. After 16 hours the constancy of weight can be assumed.

11.2.2 Liquid and aqueous pasty materials

Weigh the dry tray to get (m_T). Transfer approximately 25 g of the mixed prepared sample - in the tray (10.1.1), spread to an even depth not exceeding 5 mm and without delay weigh to an accuracy of 0,01 g (m_W). Evaporate the water placing the tray on a hot plate or in ventilated oven at 70 °C ± 5 °C until it crumbles and then dry in the oven (10.1.2) at 105 °C ± 2 °C. After cooling in the desiccator weigh the evaporating tray for the first time. The dry residue shall be regarded as constant if the mass obtained after further 1 h of drying does not differ by more than 0,5 % or 2 mg of the previous value, whichever is the greater (m_D). If the difference is greater, repeat the drying process. After 16 hours the constancy of weight can be assumed.

11.2.3 Pre-shaped materials

Take the prepared sample (9.5.2) and follow the procedure described in 11.2.1.

NOTE Loss of volatile matter — Drying the sample at 70 °C ± 5 °C and 105 °C ± 2 °C may lead to losses of certain volatile components such as free ammonia. Therefore, where these components are to be determined the analyses shall be performed on the un-dried or on the dried with tartaric acid sample.

11.3 Calculation

11.3.1 Dry matter content

Calculate the dry matter content of the sample, as received, using the following equation:

$$D_{\mathrm{M}} = \frac{\left(m_{\mathrm{D}} - m_{\mathrm{T}}\right)}{\left(m_{\mathrm{W}} - m_{\mathrm{T}}\right)} \times 100 \tag{3}$$

where

D_M is the dry matter content expressed as a percentage by mass;

m_W is the mass in grams of the wet sample plus tray;

m_D is the mass in grams of the dried sample plus tray;

m_T is the mass in grams of the empty dry tray.

11.3.2 Moisture content

Calculate the moisture content of the sample as received using the following equation:

$$W_{\mathrm{m}} = \frac{\left(m_{\mathrm{W}} - m_{\mathrm{D}}\right)}{\left(m_{\mathrm{W}} - m_{\mathrm{T}}\right)} \times 100 \tag{4}$$

where

W_m is the moisture content expressed as a percentage by mass;

m_W is the mass in grams of the wet sample plus tray;

m_D is the mass in grams of the dried sample plus tray;

m_T is the mass in grams of the empty dry tray.

11.3.3 Precision - Moisture content

The precision of the moisture content measurement of three separately prepared samples should be in accordance with Table B.1.

A summary of the results of an interlaboratory trial to determine the precision of the method in accordance with ISO 5725 [1] to [6] is given in Annex B.

NOTE The values derived from the interlaboratory trial may not be applicable to concentrations and matrices other than those given.

12 Test report

The test report shall contain the following information:

a) reference to this European Standard (EN 13040-1:—);

b) all information necessary for complete identification of the sample;

c) results of the determination to the nearest 0,1 % by mass;

d) details of any operations not specified in the European Standard or regarded as optional, as well as any factor which may have affected the results.

Annex A
(normative)

Determination of laboratory bulk density

A.1 General

A.1.1 This annex specifies methods to determine the laboratory bulk density of a test sample of organic soil improver, inorganic soil improver, growing medium, compost or digestate and enables a calculated sample weight to be taken, which will accurately represent the required (small) volume of sub-sample as required for analysis.

The physical state of the sample is decisive for the selection of the applicable method. The following 4 matrix types are distinguished for performing the bulk density:

1) Solid samples, having an estimated dry matter content of at least 30 % m/m, see clause A.2
2) Shear resistant pasty samples, having an estimated dry matter content between 15 % and 30 % m/m, see clause A.2.
3) Liquid and aqueous pasty samples, having an estimated dry matter content below 15 % m/m, see clause A.3
4) Pre-shaped samples, see clause A.4

A.1.2 This method enables computation and expression of analytical results on a weight per volume basis when results are obtained from analysis of a known weight of sub-sample.

A.2 Laboratory compacted bulk density of solid and shear resistant pasty samples

A.2.1 Principle

For solid and shear resistant pasty samples, the laboratory bulk density is determined applying to the material a pressure with a plunger. Fit a cylinder of known volume with an extension collar, fixed screen/fall controller and funnel, and fill it with the test sample chosen on size basis (9.2.1 or 9.2.3 or 9.2.5) or on dry matter content (9.3). Apply compaction, except for very compressible or springy materials (e.g. certain wood fibres and coir fibres, Sphagnum), and weigh the final contents of the cylinder.

A.2.2 Apparatus

A.2.2.1 Test Cylinders

Rigid test cylinders as shown in Figure A.1, having a nominal capacity of 1000 ml ± 30 ml or 2000 ml ± 30 ml, and a diameter (d) of 99 mm – 105 mm or of 125 mm – 133 mm in accordance with Table A.1 or Table A.2. Cylinders can be assembled using metal or suitable plastic rigid and stable pipes.

Dimensions in millimetres

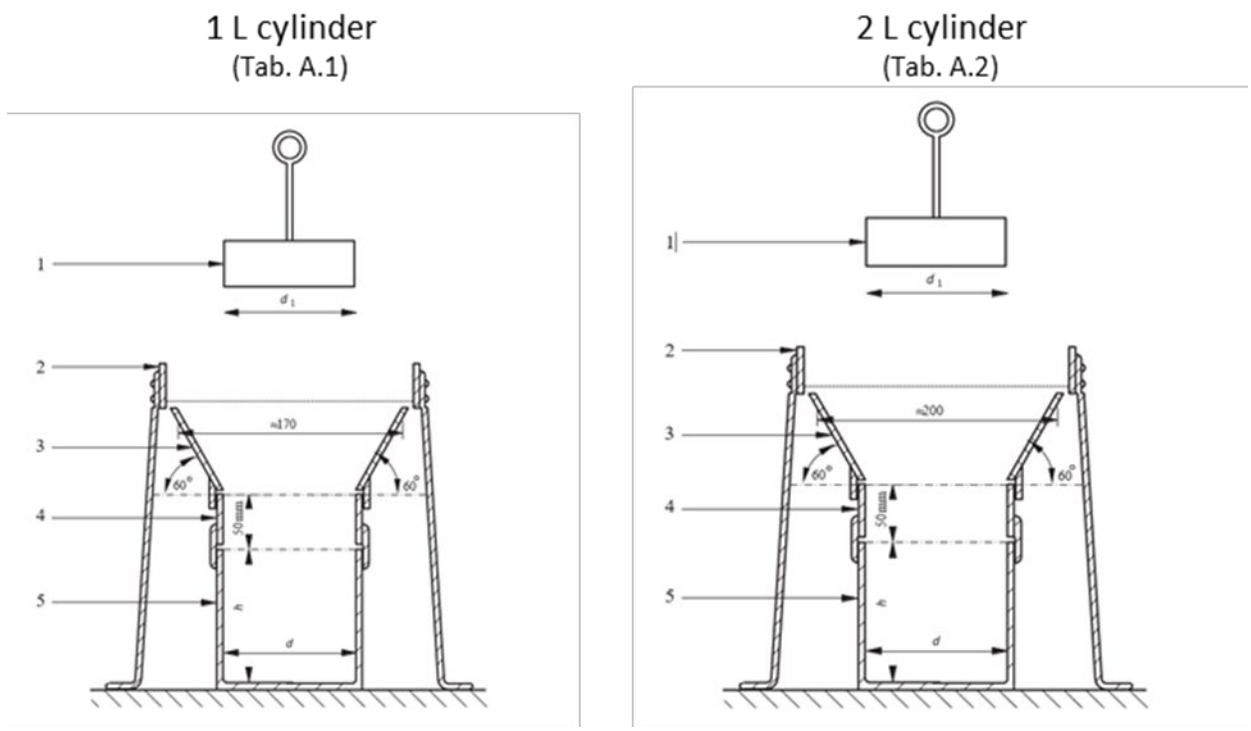

Key

1	plunger (for mass see Table A.1 or A.2)	5	test cylinder
2	supported fall controller	d	diameter as per Table A.1 or A.2
3	funnel	h	height as per Table A.1 or A.2
4	removable collar	d_1	diameter (d - 5mm) ± 1 mm

Figure A.1 — Laboratory compacted bulk density test cylinders, collars, fall controllers and plungers

Table A.1 — Dimensions of 1 l cylinder and corresponding plunger mass

Diameter (d)	**Height (h)**	**Volume**	**Mass of Plunger**
(mm)	**(mm)**	**(ml)**	**(g)**
99	130	1000	634
100	127	997	650
101	125	1001	664
102	122	997	678
103	120	1000	692
104	118	1002	706
105	116	1004	720
Tolerance	± 1 mm	± 30 ml	± 5 g

Table A.2— Dimensions of 2 l cylinder and corresponding plunger mass

Diameter (d) (mm)	Height (h) (mm)	Volume (ml)	Mass of Plunger (g)
125	163	1999	1018
126	161	2006	1034
127	158	2000	1051
129	153	1999	1084
130	151	2003	1101
132	146	1997	1135
133	144	2000	1153
Tolerance	± 1 mm	± 30 ml	± 5 g

The capacity should be checked by weighing to the nearest 1 g, the empty cylinder and a clear rigid striking plate which is larger than the surface of the cylinder. Fill the cylinder with tap water; apply the striking plate wiping all the exterior surfaces until dry and re-weigh. The difference between the two weightings should equal 1000 g or 2000 g ± 30 g. Repeat the test, the difference between the two tests should not exceed ± 5 g.

A.2.2.2 **Removable collar,** 50 mm high and of the same internal diameter as the cylinder.

A.2.2.3 **Plunger,** having a diameter (d_1) 5 mm less than both the cylinder and the collar and having a mass as per Table A.1 or Table A.2 to maintain a pressure of 8,3 g/cm^2.

A.2.2.4 **Funnel with a slope at approximately 60°,** with a lower diameter to fit the collar.

A.2.2.5 **Supported fall controllers:** sieve with a perforated plate or woven wire screen with an approximate 200 mm diameter, 20 mm square apertures or 20 mm mesh or 40 mm square apertures or 40 mesh size, independently supported approximately 5 mm above the funnel and not connected to it or the cylinder.

A.2.2.6 **Analytical balance,** with a scale interval of 1 g and a minimum capacity of weighing 5000 g.

A.2.2.7 **Straight edge.**

A.2.2.8 **Scoop,** 250 ml to 500 ml capacity.

A.2.2.9 **Tripod,** to support the fall controller (A.3.5).

A.2.3 Procedure

For solid samples choose on the material size basis the appropriate screen/fall controller, cylinder, plunger and test sample to fill the cylinder:

a) when more than 20 % m/m of the unsieved test sample (9.2.1) has been retained on the 40 mm sieve: no fall controller, cylinder A.2, plunger (Tab. A.2) and unsieved test sample 9.2.1;

b) when 20 % m/m or less of the unsieved test sample (9.2.1) has been retained on the 40 mm sieve: screen/fall controller 40 mm square apertures, cylinder A.1, plunger (Tab. A1) and test sample 9.2.3;

c) when 10 % m/m or less of the unsieved test sample (9.2.1) has been retained on the 20 mm sieve: screen/fall controller 20 mm square apertures, cylinder A.1, plunger (Tab. A1) and test sample 9.2.5.

For shear resistant pasty samples choose:

screen/fall controller 20 mm square apertures, cylinder A.1, plunger (Tab. A1) and test sample 9.3.

A.2.3.1 Manually, but carefully homogenize and gently open up any agglomerations or accretions that have resulted from handling or storing of the sample.

NOTE Care should be taken to avoid reducing the inherent particle size, which would render the material finer than it was at the time of test sample preparation.

A.2.3.2 Weigh the chosen (A.2.3) empty test cylinder (A.2.2.1 Tab. A.1 or A.2) to the nearest 1 g using the balance (A.2.2.6). Place the collar (A.2.2.2) and the funnel (A.2.2.4) in position. Choose the appropriate (A.2.3) fall controller. Place the fall controller (A.2.2.5) in position approximately 5 mm above the funnel.

A.2.3.3 Using the scoop (A.2.2.8), take equal amounts of the chosen test sample (A.2.3) throughout the mass, filling the apparatus by sprinkling the material on top of the screen/fall controller (A.2.2.5).

A.2.3.4 Once the removable collar has overfilled, remove the screen and strike off the excess material level with the top of the collar using the straightedge (A.2.2.7). Gently place the plunger (A.2.2.3 Tab. A.1 or A.2) on the material, leave for 10 s ± 2 s, then carefully remove the plunger and collar taking care not to vibrate the cylinder, then use the straight edge (A.2.2.7) to strike off the material level with the top of the cylinder avoiding further compaction or disturbance. Weigh the material and cylinder to the nearest 1 g using the balance. Record the result (m_X).

If the material is very compressible and the top surface is found to be below the top of the cylinder when the plunger is removed after static compaction of 10 s ± 2 s, then compaction is inappropriate for the test material. In these circumstances, repeat the procedure without applying the plunger to provide a measure of the un-compacted bulk density. Record if the plunger was not used and include that information in the test report.

Striking off may be difficult with very coarse, fibrous, woody or otherwise heterogeneous materials, and large pieces might have to be removed by hand, cut with a pair of scissors or broken off level with the top of the cylinder. Any resulting depressions on the surface of the cylinder should be filled from the remainder of the sample.

A.2.3.5 Perform the measurement at least 2 times using fresh material each time to obtain a mean value.

A.3 Laboratory bulk density of liquid and aqueous pasty samples

For liquid and aqueous pasty samples with a dry matter content less than 15 %, a gravimetric density determination is performed. Take 250 ml of test sample 9.4 with a cylinder (short form, 10 ml graduated 250 ml cylinder) and weigh to the nearest 0,1 g.

NOTE A funnel can be used to bring the sample in the cylinder.

Perform the measurement at least 2 times using fresh material each time to obtain a mean value.

A.4 Laboratory bulk density of pre-shaped growing media

Determine the bulk density of pre-shaped growing media following EN 15761:—.

A.5 Expression of results for solid, share resistant pasty, liquid and aqueous pasty samples

The laboratory bulk density is given by the following equation:

$$L_D = \frac{m_L - m_0}{V} \quad \text{(A.1)}$$

where

L_D is the laboratory bulk density in grams per litre;

m_L is the mass in grams of sample and cylinder;

m_0 the mass in grams of the empty test cylinder;

V is the volume in litres of the test cylinder.

Calculate the arithmetic mean of all the results obtained using the following equation:

$$mL_D = \frac{\sum L_D}{n} \quad \text{(A.2)}$$

where

mL_D is the arithmetic mean laboratory bulk density in grams per litre;

n is the number of replicates.

A.6 Precision - laboratory bulk density

The repeatability and reproducibility of the laboratory bulk density content measurement in three separately prepared samples should be in accordance with Table B.2.

A summary of the results of an interlaboratory trial to determine the precision of the method in accordance with ISO 5725 [1] to [6] is given in Annex B.

NOTE The values derived from the interlaboratory trial may not be applicable to concentrations and matrices other than those given.

A.7 Use and storage of material

A.7.1. Because of the physical characteristics of material subjected to this procedure will have been altered, the material used in this test should not be used subsequently for the determination of any physical properties such as moisture content, particle size analysis or water retention. However, it may be used for other analyses where a dried sample is appropriate.

A.7.2 If not for immediate use the sample should be placed into a moisture-proof bag or container and the container sealed and stored below 5 °C but not frozen.

A.8 Test report

The test report shall contain the following information:

a) reference to this European Standard (EN 13040-1);

b) all information necessary for complete identification of the sample;

c) in the case the un-compacted bulk density is determined on solid and shear-resistant pasty samples, this is to be mentioned;

d) results of the determination to the nearest 5 g per l;

e) details of any operations not specified in the European Standard or regarded as optional, as well as any factor which may have affected the results.

Annex B
(informative)

Results of an interlaboratory trial to determine moisture content and laboratory bulk density

Materials used in the interlaboratory comparison study

The validation study of determination of laboratory bulk density in compost, digestate, inorganic and organic soil improver or growing media were carried out with *** to *** European laboratories on *** materials.

Table. B1 provides a list of the materials chosen for testing and the selected components.

Table B1 — Material tested in the interlaboratory comparison of the method for the determination of moisture content and laboratory bulk density

CMCs and PFCs	Particle size
1: Compost	<40 mm
2: Perlite, peat	<40 mm
3: Peat	<20 mm
4: Coir	<40 mm
5: Bark	>40 mm
6: Preshaped	
7: Pasty aqueous digestate	

Bibliography

[1] ISO 5725, *Accuracy (trueness and precision) of measurement methods and results*

[2] ISO 5725-2, *Accuracy (trueness and precision) of measurement methods and results — Part 2: Basic method for the determination of repeatability and reproducibility of a standard measurement method*

[3] ISO 5725-3, *Accuracy (trueness and precision) of measurement methods and results — Part 3: Intermediate measures of the precision of a standard measurement method*

[4] ISO 5725-4, *Accuracy (trueness and precision) of measurement methods and results — Part 4: Basic methods for the determination of the trueness of a standard measurement method*

[5] ISO 5725-5, *Accuracy (trueness and precision) of measurement methods and results — Part 5: Alternative methods for the determination of the precision of a standard measurement method*

[6] ISO 5725-6, *Accuracy (trueness and precision) of measurement methods and results — Part 6: Use in practice of accuracy values*

[7] ISO 6206, *Chemical products for industrial use — Sampling — Vocabulary*

[8] EN 13041, *Soil improvers and growing media — Determination of physical properties — Dry bulk density, air volume, water volume, shrinkage value and total pore space*

[9] EN 13654-2, *Soil improvers and growing media — Determination of nitrogen — Part 2: Dumas method*

[10] EN 13650, *Soil improvers and growing media — Digestion of aqua regia soluble elements*

[11] CEN/TS 00223137:—, *Soil improvers and growing media — Terminology*